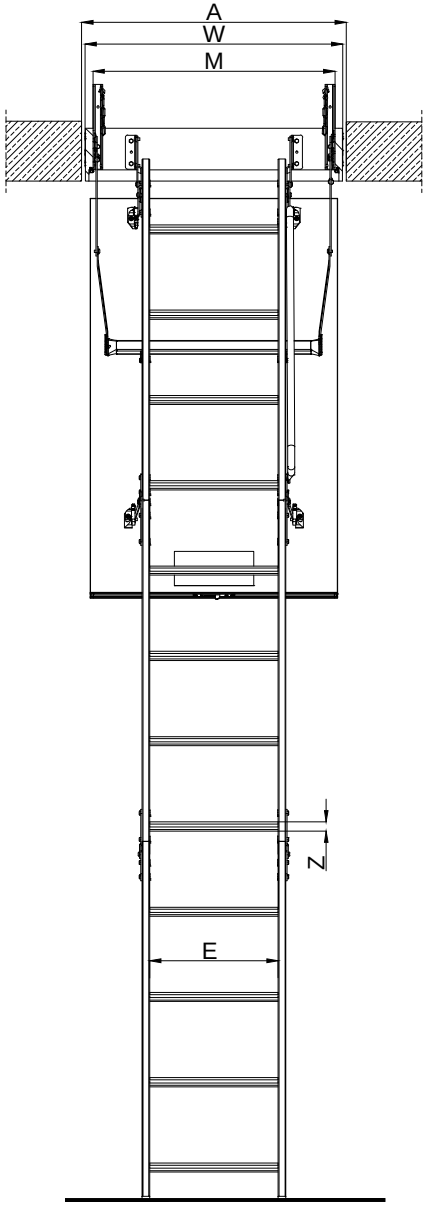

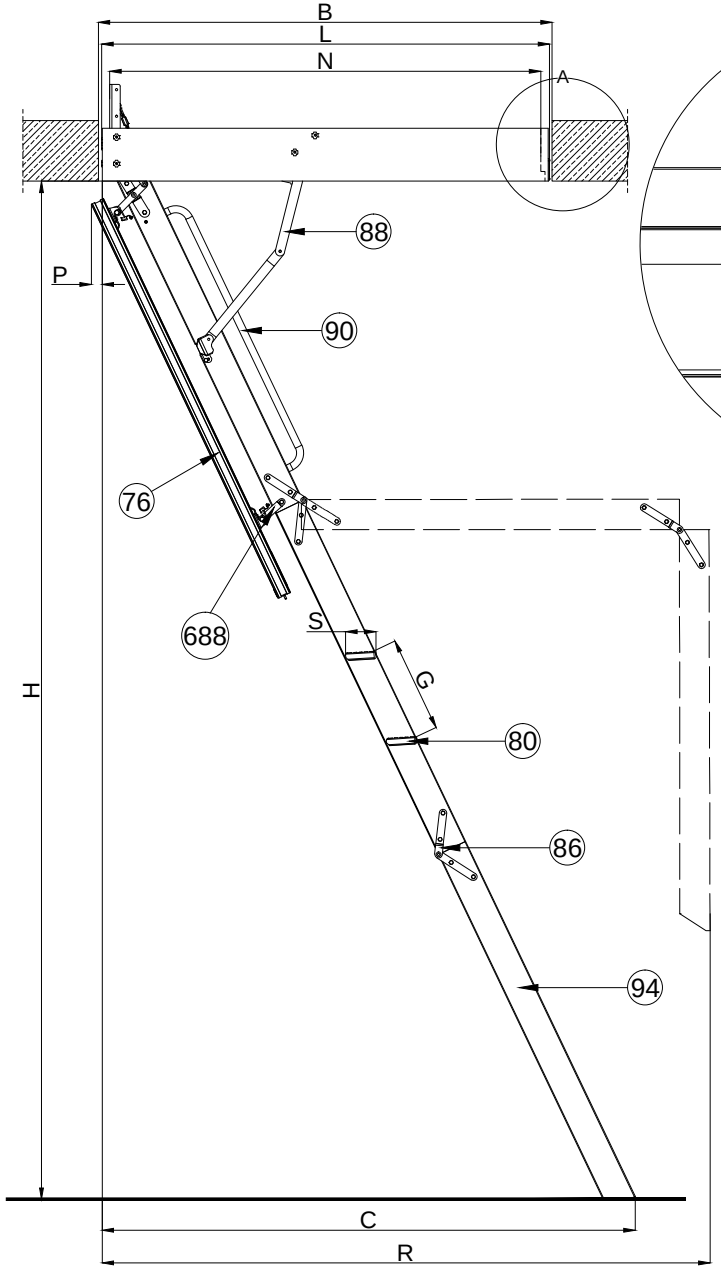

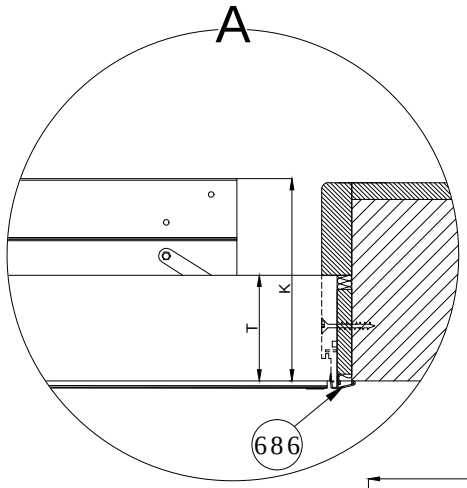

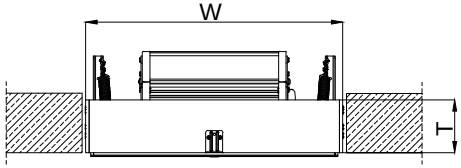

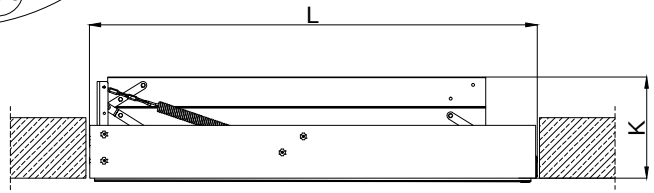

76-Hatch
80-Tread
86-Hinge
88-Side bracket
90-LXH handrail
94-Stringer (ladder side element)
686-Lining slats LXL-PVC FAKRO
688-Plastic fastener (the so-called "click")

P Board movement after opening	S Tread width	Z Tread thickness	G Distance between treads
[in]	[in]	[in]	[in]
1 1/4"	3 1/8"	7/8"	9 7/8"

Loft ladder dimensions

H Room height	A Width ceiling opening dimensions	B Length ceiling opening dimensions	K Folded ladder height	R Swing space	C Distance after ladder unfolding	E Tread length	T Box height	WxL Box external dimensions	MxN Internal box dimensions
[in]	[in]	[in]	[in]	[in]	[in]	[in]	[in]	[in]	[in]
7'5"-8'11"	22 1/2"	47"	10 3/4"	64 1/2"	57 1/2"	13 1/4"	5 1/2"	22"/46 5/8"	20 1/2"/44 7/8"
	25"	47"						24 1/2"/46 5/8"	23"/44 7/8"
7'10"-10'1"	22 1/2"	54"		72"	64"			22"/53 1/2"	20 1/2"/51 3/4"
	25"	54"						24 1/2"/53 1/2"	23"/51 3/4"
	30"	54"						29 1/2"/53 1/2"	28"/51 3/4"
8'8 1/2"-10'8"	22 1/2"	54"		75 1/2"	65 1/2"			22"/53 1/2"	20 1/2"/51 3/4"
	25"	54"						24 1/2"/53 1/2"	23"/51 3/4"
	30"	54"						29 1/2"/53 1/2"	28"/51 3/4"

FAKRO

LWP

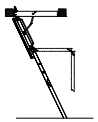

Technical drawing: The LWP Attic Ladder	FORMAT: A4	SCALE: 1:20/1:10	DATE: 05.2015