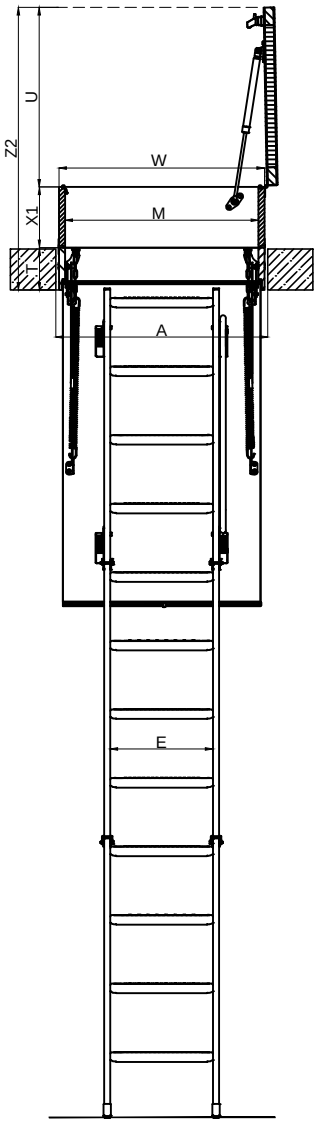

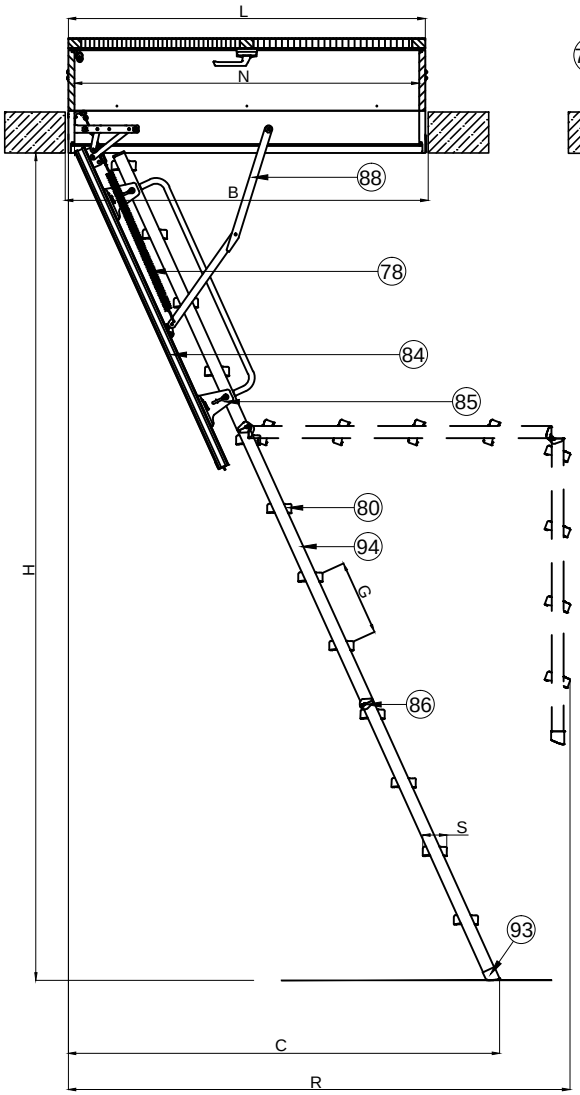

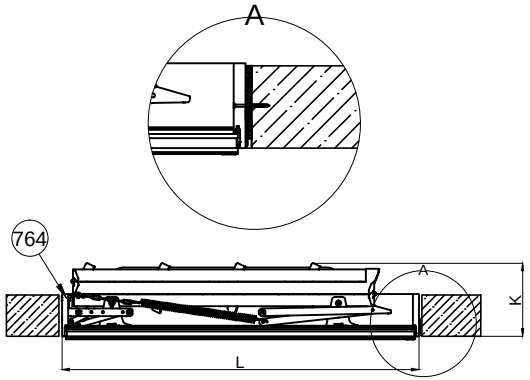

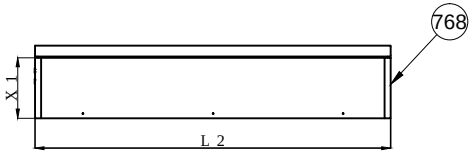

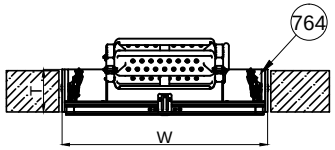

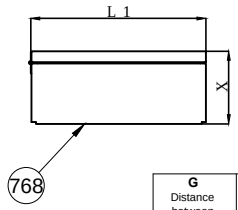

78-Spring
80-Tread
84-Thermo-insulated hatch
85-Ladder bracket
86-Hinge
88-Side bracket
93-Stile end
764-The LMS Loft Ladder
768-LXW-B upper hatch

G Distance between steps	S Steps width	E Steps length
[inch]	[inch]	[inch]
9⅞"	3⅛"	13¾"

LXW-B					
L 1 Box width	L 2 Box length	X Height of closed upper hatch	X1 Box height	U Height of open sash	Z Height of open set LMS+LXW-B
[inch]	[inch]	[inch]	[inch]	[inch]	[inch]
22"	46⅝"	9½"	7¾"	22 1/16"	35 5/16"
24½"	46⅝"			24 3/16"	37 11/16"
22"	51¾"			22 1/16"	35 5/16"
24½"	51¾"			24 3/16"	37 13/16"
29½"	51¾"			29 7/16"	42 13/16"

LMS	Manufacturer's part number	ATTIC LADDER LMS								
		H Ceiling height	A Width ceiling opening dimensions	B Length ceiling opening dimensions	K Folded ladder height	R Projection	C Landing space	T Frame height	WxL Outside frame dimensions	MxN Internal box dimensions
		[inch]	[inch]	[inch]	[inch]	[inch]	[inch]	[inch]	[inch]	[inch]
22½"x47"	66865	7'2"-8'11"	22½"	47"	10"	65½"	56"	5½"	22"x46⅝"	20½"x44⅞"
25"x47"	66866		25"	47"					24½"x46⅝"	23"x44⅞"
22"x54"	66867	7'11"-10'1"	22½"	54"		73¼"	62¼"		22"x53½"	20½"x51¾"
25"x54"	66868		25"	54"					24½"x53½"	23"x51¾"
30"x54"	66869		30"	54"					29½"x53½"	28½"x51¾"

FAKRO

LMS

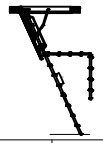

Technical drawing: The LMS Attic Ladder, LXW-B upper hatch	FORMAT: A4	SCALE: 1:25	DATE: 10.2020