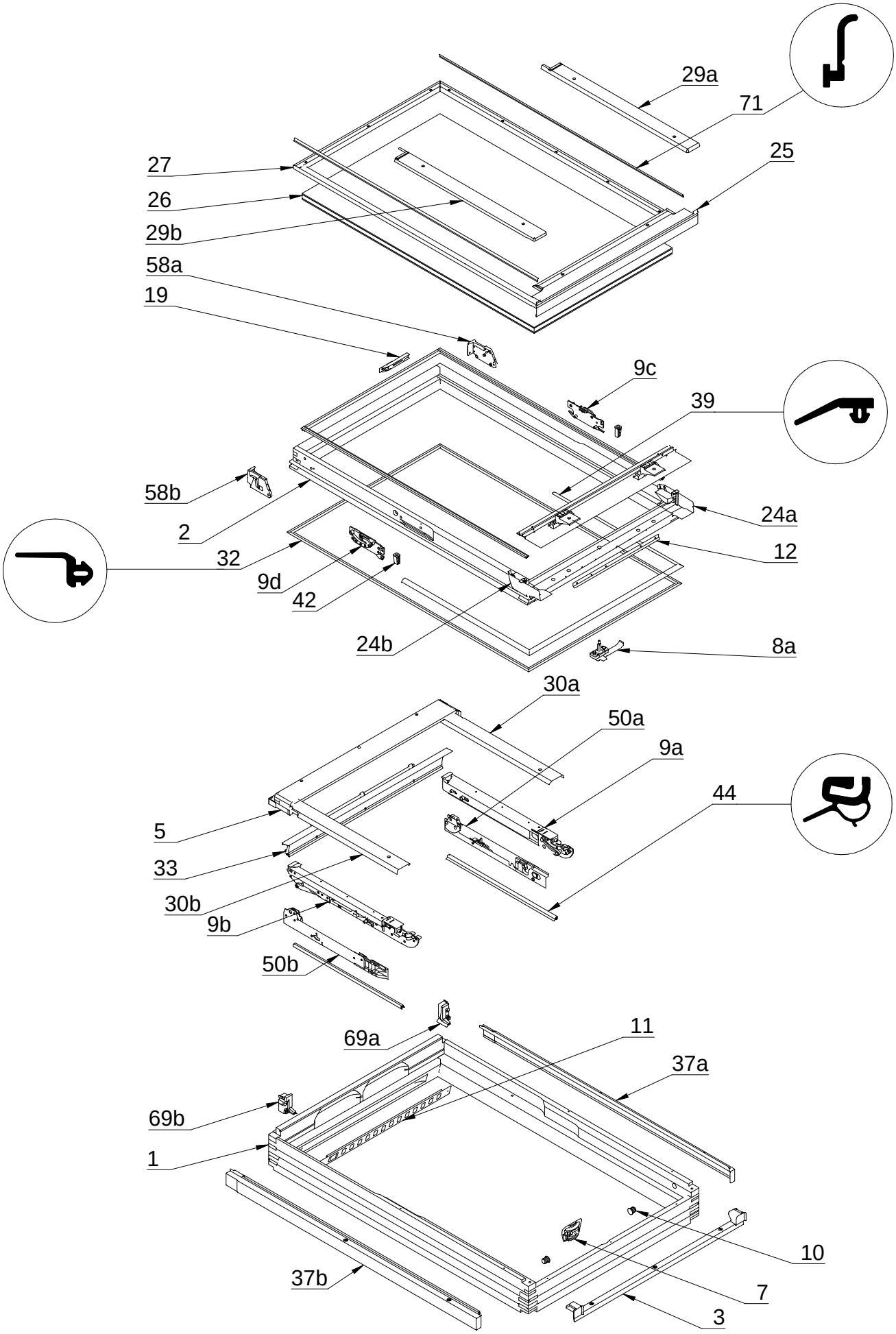

© FAKRO, 2012, All rights reserved.

FAKRO | FPP-V | 2012-03-06 | R052S